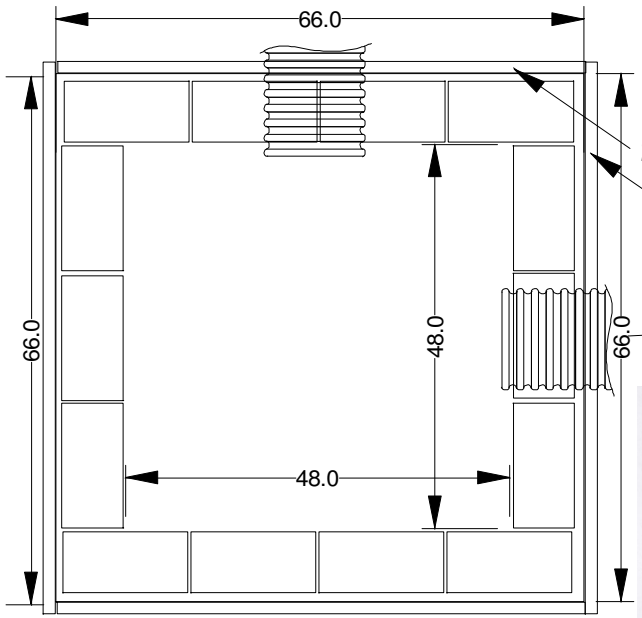

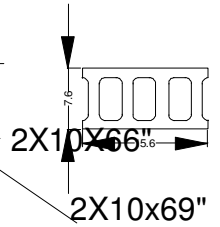

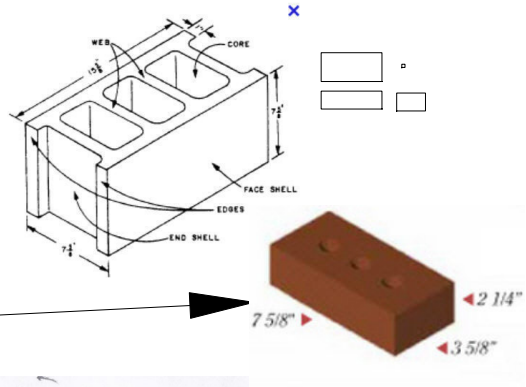

Material List		
Blocks	112	pcs
Bricks	112	pcs
Concrete	34	60 lb. bags
Stone	4	Cu Ft
Mortar	6	60 Lb Bags
Conc/Mortar (To fill the blocks)	90	60 Lb Bags
Rebar	96	Linear feet
Rebar ties		

$\tan(2^\circ) = .035 = H / L$

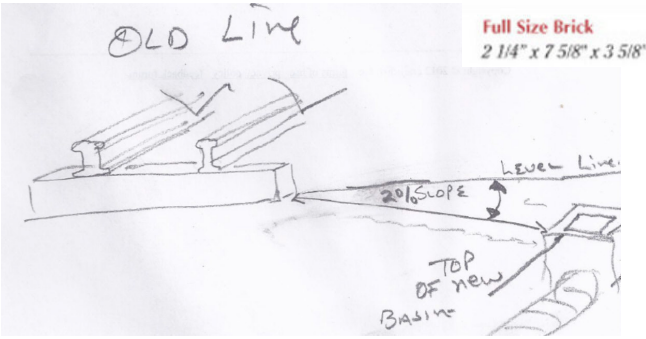

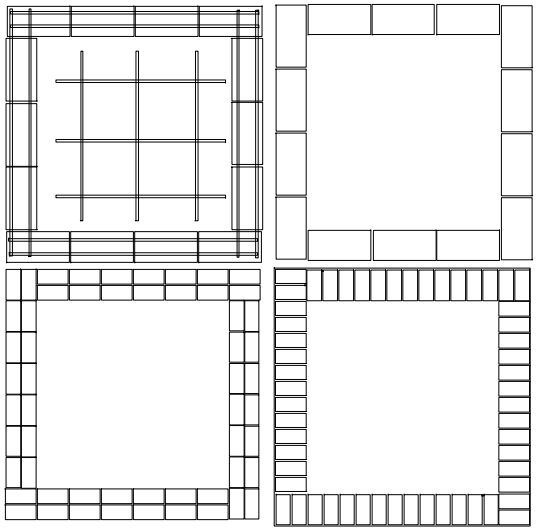

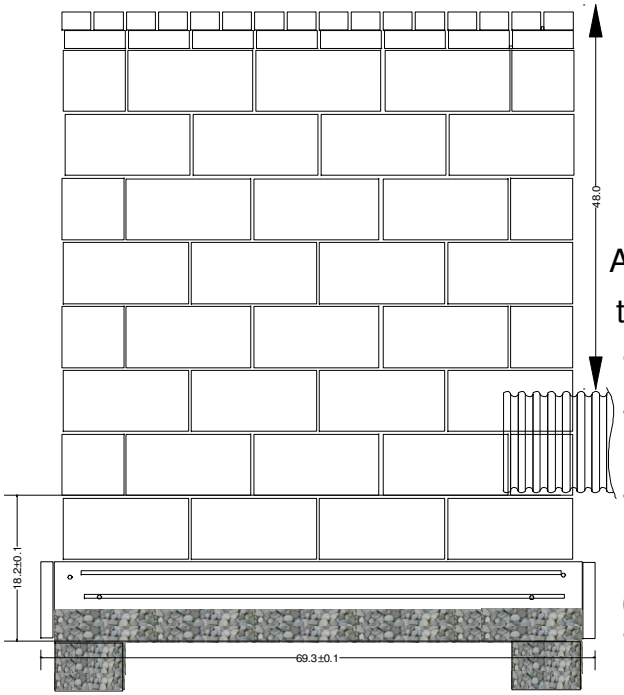

14 Blocks per tier

56 Bricks per tier

After making approximate measurments the hieght of hte catch basin needs to be 4 feet above the pipe.

There will be a 6" slab on top a 4" of stone.
2X10s will be used to frame the base.
The slab will be 8" (1 block) below the corrugated drain pipe.

2X10 Frame
6" Concrete slab
4" Stone

New Hope Valley Railway
N.C. Railroad Museum & East Carolina Chapter NRHS

4' X 4' Catch Basin

04/24/2013 4X4 catch basin6

Drawn by: *Ted Dunn*