
**John's Signal – Circuit Description The Block Signal Remote Control - Revised 6/22/2012**

**System Operation, Executive Summary:**

**Goal:**
Control the Red, Yellow, or Green lights on the block signal from dispatcher's office.

**Solution:**
Press the Red, Yellow or Green button on the Block Signal Remote Control operator's panel.

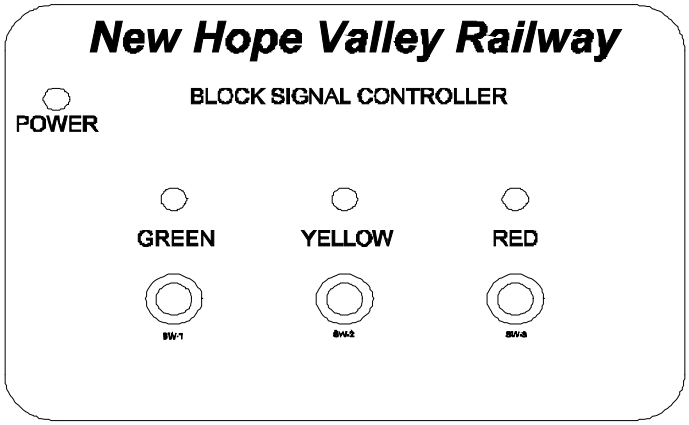


## Details

**The Goal:**

To control the Red Green and Yellow lights of the block signal from the dispatcher's office using a wireless link (RF).

**The solution** The NVRY Block Signal Remote

There are three push buttons for each of the signal lights and three LEDs to indicate which light is on. The operator presses the button for whichever light is desired.

## NOTE: IT TAKES APPROXIMATLEY 7 SECONDS FOR THE LIGHTS TO CHANGE STATE


**Specifics**

The transmitter/receiver selected (based on budget restrictions) provides 4 momentary (4 second) relay contact closures at the block signal side. Relay 1 is used to turn off all of the lights, ie. Reset . Relays 2, 3 and 4 are used to turn on each light.

The transmitter sends out commands to switch the relays and control the lights at the operator's request. Whenever any button is pressed two signals are transmitted. First relay 1 is activated, then the lamp relay is activated. The process takes about 6 seconds to complete.

The transmitter is located in the office. Rather than running cable to from the office to the signal, this system uses a wireless RF link, Absolute Automation part #: DKWUTR300.

The control panel has three push button switches to control the Red Green and Yellow signal lights. The receiver is located at the signal. It is mounted in a weatherproof enclosure and installed near the top of the block signal.
When the operator presses one of the buttons, the transmitter sends two signals to the receiver. The first signal turns off the signal lamp. The second signal lights the signal lamp corresponding to the button pressed.

**Transmitter - Receiver**

The transmitter and receiver is a Absolute Automation DKWUTWR3000
The transmitter is a single channel unit.
The receiver puts out 4 relay closures. The relays pull in for 4 seconds.
The transmitter will control any one of the 4 relays by setting the DIP Sw positions 9 and 10.

**The add on circuitry in the receiver:**

1- latches the momentary relay closure
2- switches the 12 v 1 amp lamps on and off

The lamp drivers use an SN74C74 D-Flip-Flop chip the C version is a CMOS logic chip that operates on voltage levels up to 15 volts Other TTL logic chips operate on 5 volts only.

As of April 2012, these chips are no longer available. They were replaced with standard TTL logic family chips. 7474, 74LS74, 47HC74, etc. will all work.
To use these chips, a 5 volt regulator was added.

Relay 1 is used to reset the lamp driver and turn off all lamps.

Relays 2, 3 and 4 are used to latch the Red, Yellow and Green lamps.

Transistors Q1, Q2 and Q3 interface the Flip-Flops with the power transistors, Q3, Q4 and Q5.


To insure that when the circuit is turned on all of the lamps are off C2 holds the CLR inputs on all of the flip-flops low through diode D1 when power is applied. Once C2 charges up to Vcc, D1 prevents is from having any further effect on the operation of the circuit. R13 discharges C2 when power is removed.

R11 and C1 create a short pulse out of the 4 second relay closure to reset the flip-flops.

**The add on circuitry in the transmitter**:

1- Accepts the user command from the control panel
2- Resets any lamp that is on to off by sending a transmit command to relay 1
3- Sets the DIP Sw levels to control any of the three momentary relays.
4- Sends a transmit command.
5- Set the tally light on the control panel indicating which relay was activated

Since the receiver holds the relays closed for 4 seconds, the reset or turn off signal is sent first and 4 seconds later the turn on signal must be sent. Rather than using one-shots or timer chips to create time delays, a master clock and shift register was used.

IC-10 is an NE555 timer chip. It is generating the master clock, approximately 1 Hz .

IC-4 is an 8 bit shift register. It controls the timing of the signals.

IC-1, IC-2 and IC-3 accept the control panel switch. Any switch pressed sets the input to the shift register input through the 3 input nand gate.
Pin 13 latches the momentary signal. The switch signal must be low until the next clock transition.

When the first clock pulse shifts the signal to output A at pin 3, the transmit command is sent to activate relay 1. Dip Sw 9 and Dip Sw 10 are both low.

At the second clock pulse, output 2 of the shift register, pin 4, resets the latch section of IC-1 through 3.

It also resets the control panel's tally light flip-flops at IC-11 and IC-12.

Nothing happens until the 5$^{th}$ clock pulse. The delay is needed allow the transmitter to complete its cycle on relay 1.


At the 5th clock pulse, the Dip Sw logic is set for the next transmit command. This logic configuration is set for clock cycles 5, 6 and 7 of the shift register using the other 3 input nand gate. This also sets the tally flip-flop for the control panel indicators zat IC-11 and IC-12.

The second transmit command is sent on clock cycle 6 from pin 11 of the shift register.

At clock cycle 8 the Dip Sw logic is reset.

The system will now remain static until another switch is activated by the operator.

Since the system has a half second delay after a button is press before there is any indication that anything has happened, a button beeper was added to give the operator positive feedback. This is accomplished with C5, Rx, IC-9 pin 8 and a sonolert.

Note that the control panel LEDs indicate that commands were sent. There is no positive feedback that the appropriate light is on. To do this an additional RF link would be required which would double the complexity and expense of the controller.


New Hope Valley Railway

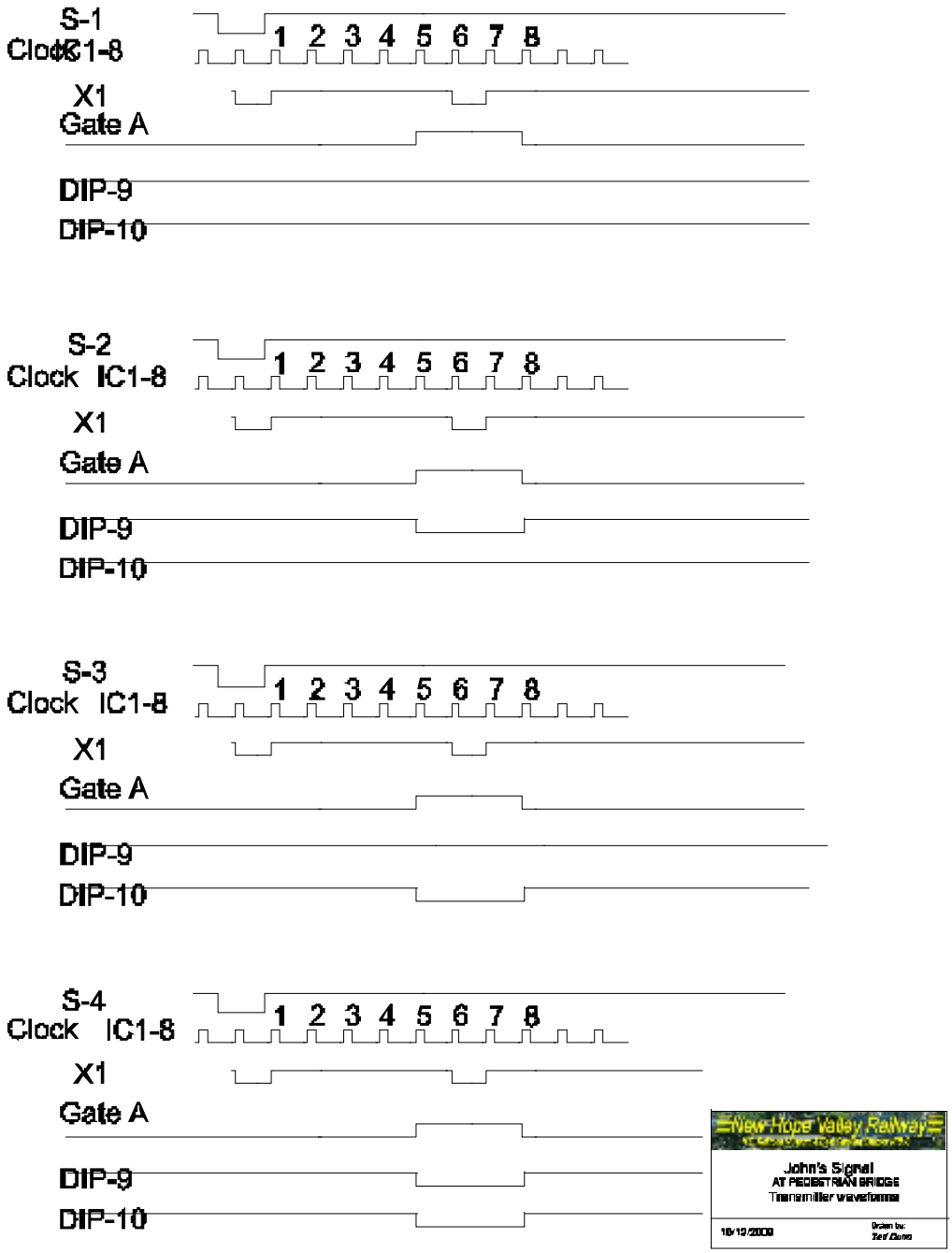
S-1
Clock IC1-8
1 2 3 4 5 6 7 8
X1
Gate A
DIP-9
DIP-10
S-2
Clock IC1-8
1 2 3 4 5 6 7 8
X1
Gate A
DIP-9
DIP-10
S-3
Clock IC1-8
1 2 3 4 5 6 7 8
X1
Gate A
DIP-9
DIP-10
S-4
Clock IC1-8
1 2 3 4 5 6 7 8
X1
Gate A
DIP-9
DIP-10
New Hope Valley Railway
John's Signal
AT PEDESTRIAN BRIDGE
Transmitter waveforms
10/12/2009
Drawn by:
Ted Cone


Transmitter Schmatic

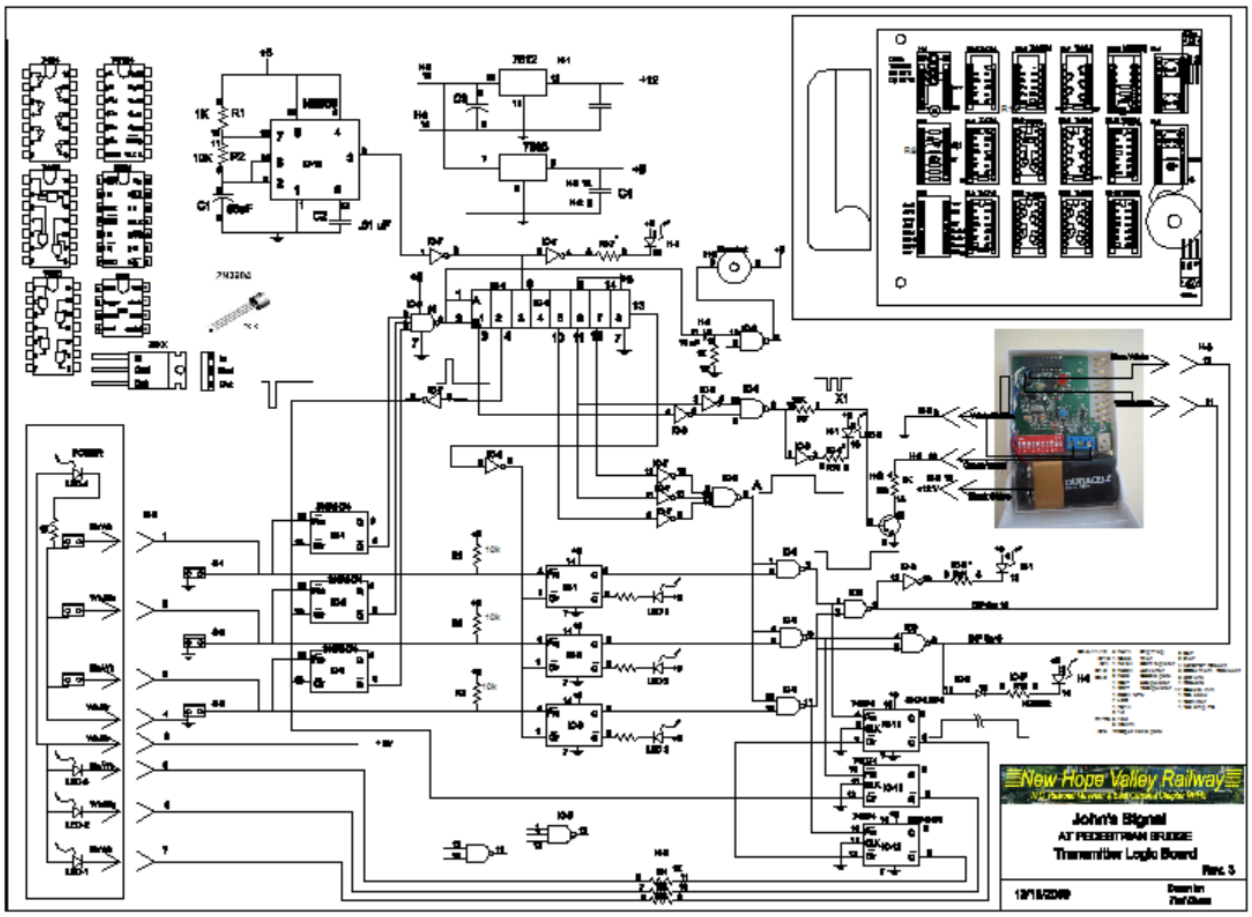


Revised ReceiverSchmatic